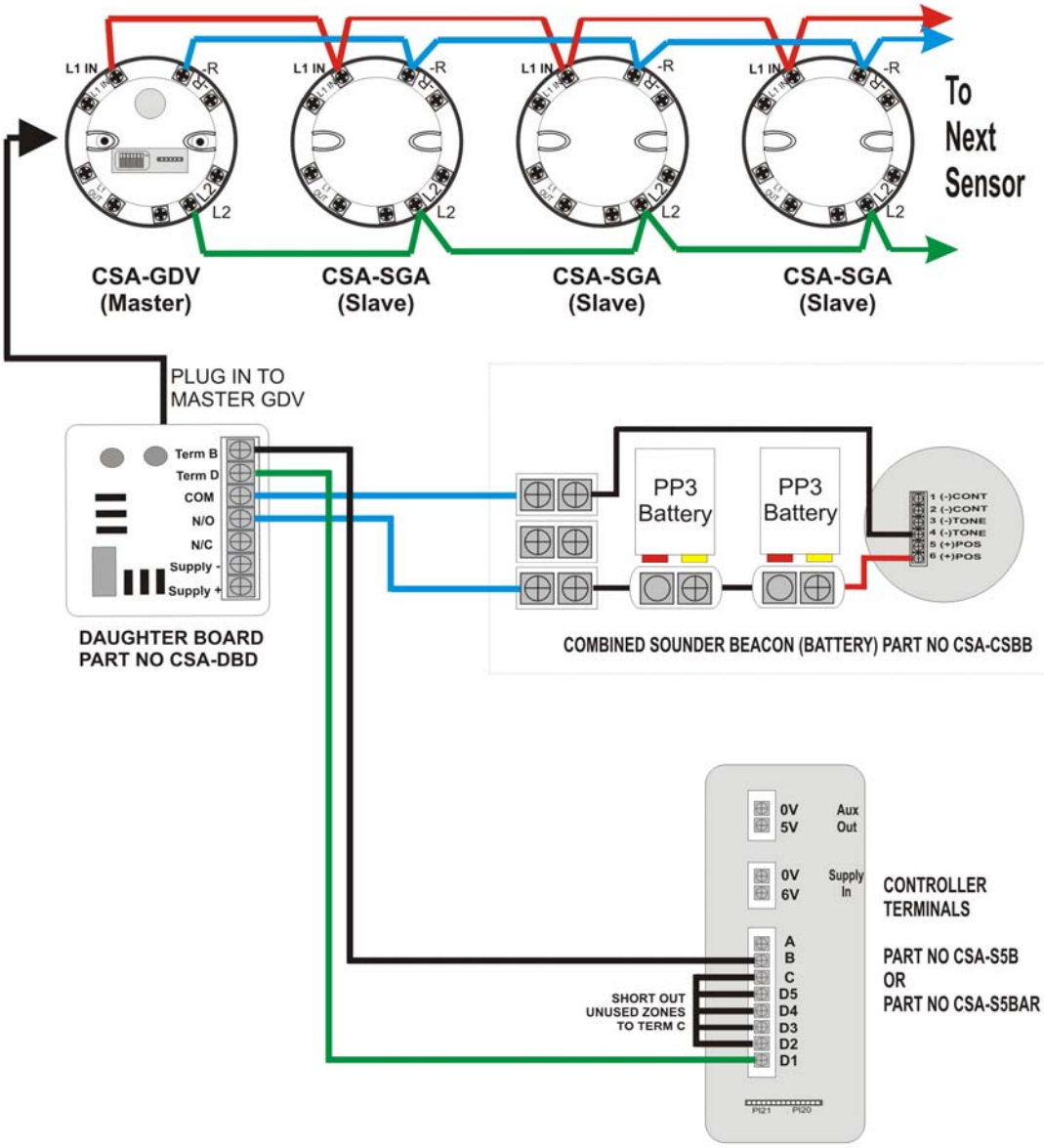

Cig-Arrete Master Slave Circuit Diagram
(Battery Powered)

Radal Technology Ltd
Unit 1 Webber Court
Billington Road
Burnley
Lancashire BB11 5UB
England

Web: www.radaltechnology.com

Phone: +44 (0)1282 463 770
Fax: +44 (0)1282 463 771
Email: info@radaltechnology.com

Issue Date: December 2006

Plan For The Ban

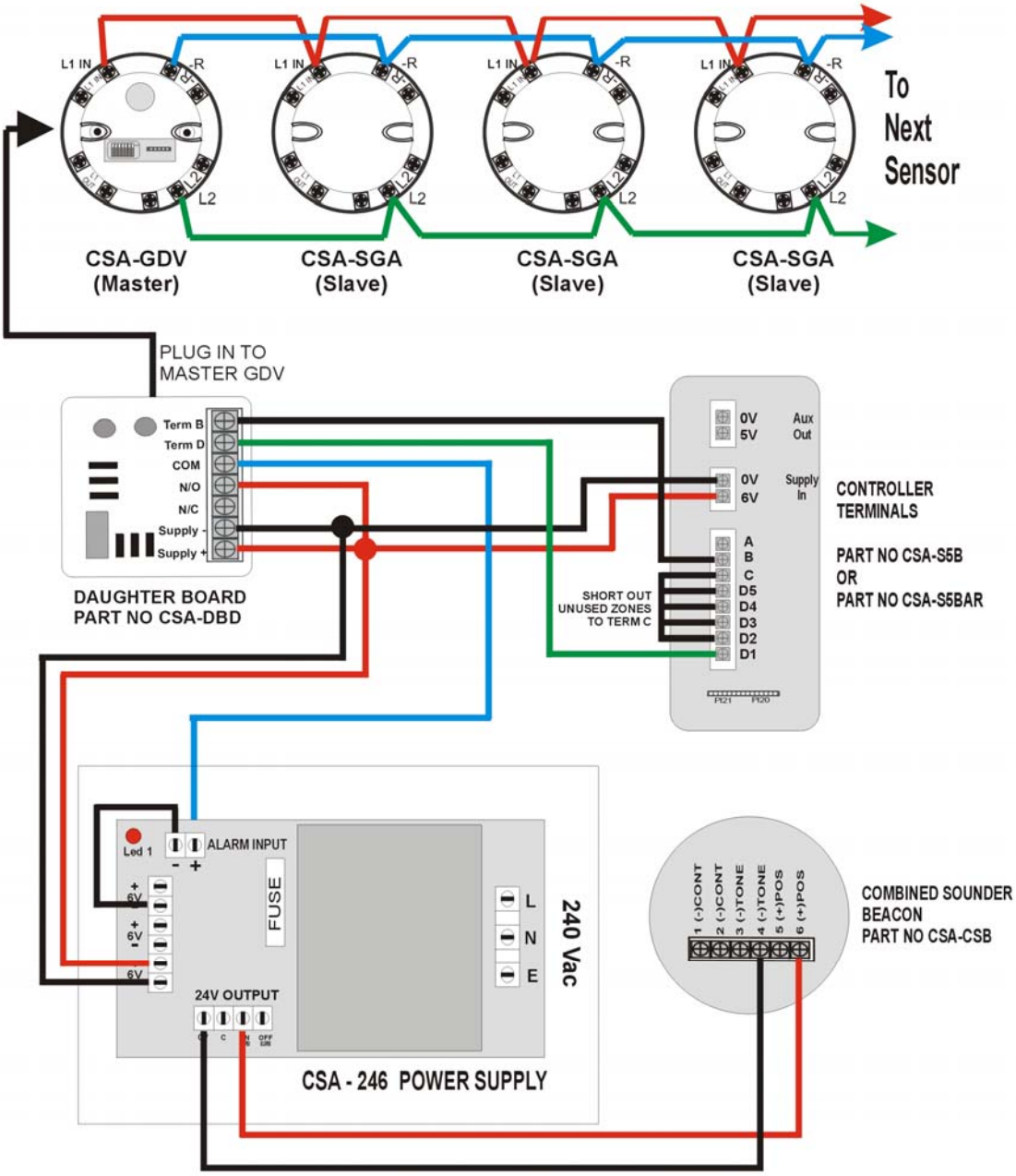

Cig-Arrete Master Slave Circuit Diagram with Power Supply and 24v Beacon

Radal Technology Ltd
Unit 1 Webber Court
Billington Road
Burnley
Lancashire BB11 5UB
England

Web: www.radaltechnology.com

Phone: +44 (0)1282 463 770
Fax: +44 (0)1282 463 771
Email: info@radaltechnology.com

Issue Date: December 2006

Plan For The Ban

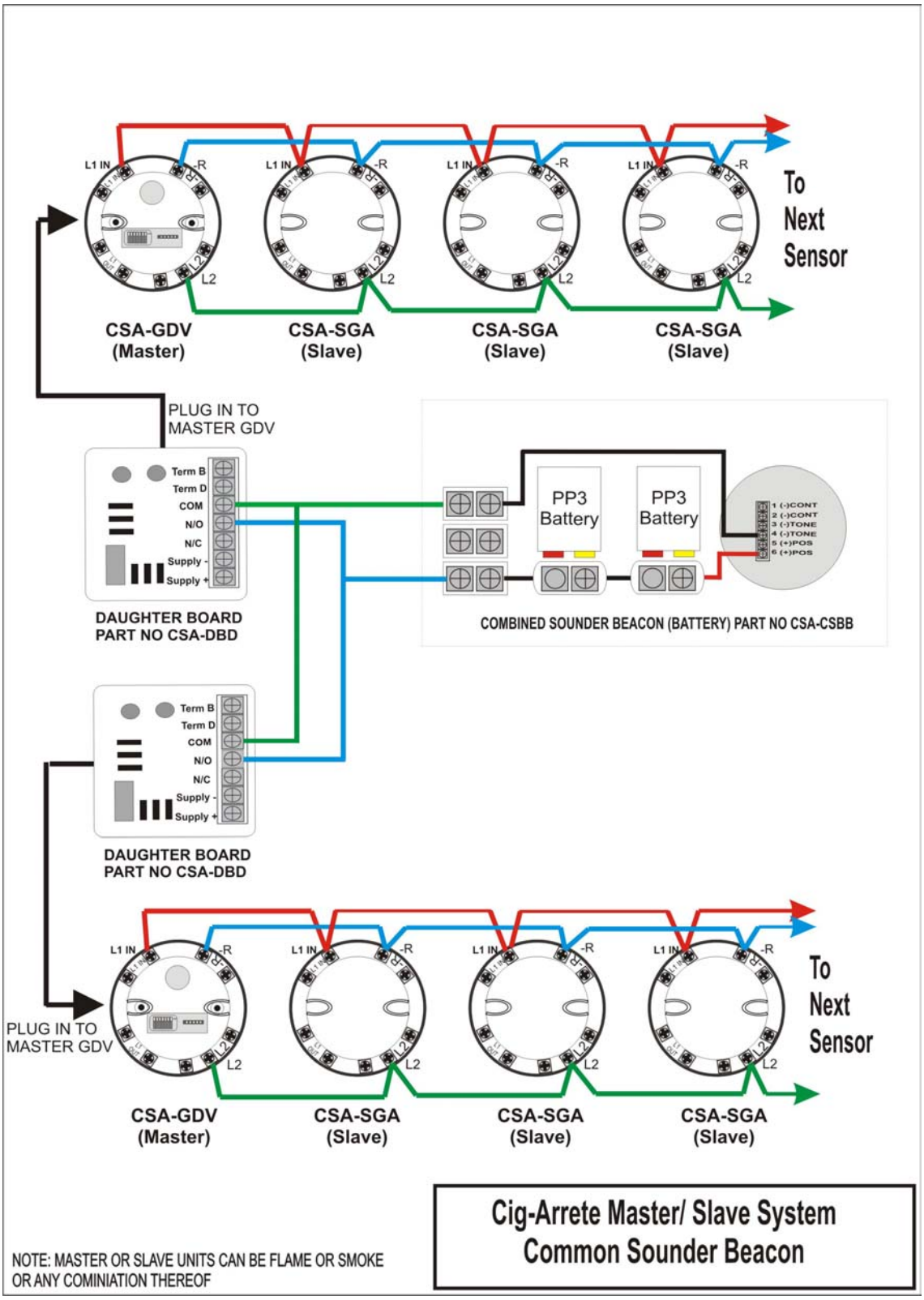

Radal Technology Ltd
Unit 1 Webber Court
Billington Road
Burnley
Lancashire BB11 5UB
England

Web: www.radaltechnology.com

Phone: +44 (0)1282 463 770
Fax: +44 (0)1282 463 771
Email: info@radaltechnology.com

Issue Date: December 2006

Plan For The Ban

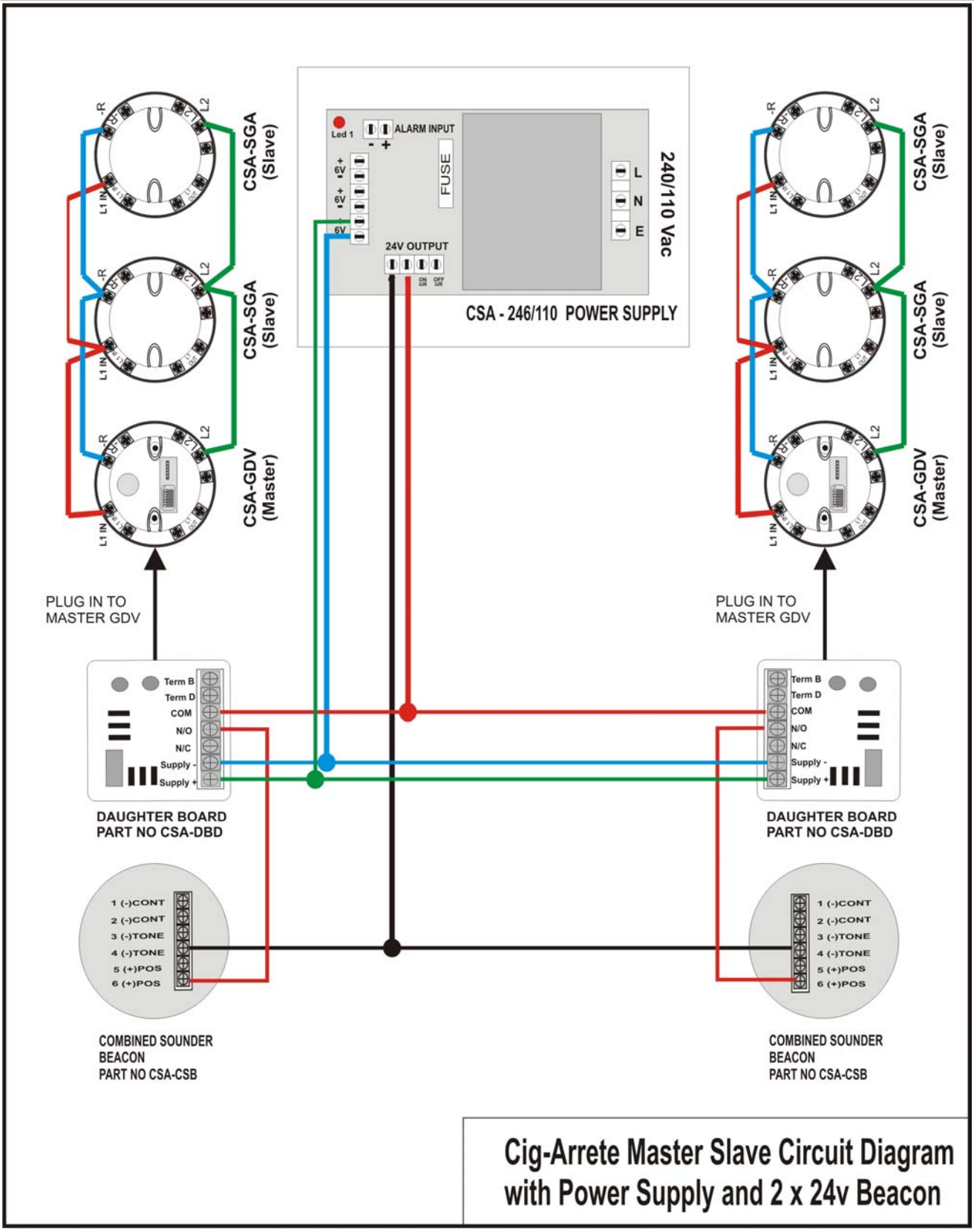

Cig-Arrete Master Slave Circuit Diagram with Power Supply and 2 x 24v Beacon

Radal Technology Ltd
Unit 1 Webber Court
Billington Road
Burnley
Lancashire BB11 5UB
England

Web: www.radaltechnology.com

Phone: +44 (0)1282 463 770
Fax: +44 (0)1282 463 771
Email: info@radaltechnology.com

Issue Date: December 2006

Plan For The Ban