Cig-Arrête Slave Sensor Unit (Part No CSA-FUV)

Description

Designed for the detection of unauthorised smoking in areas subject to high winds, rapid ventilation, smoke and gas. Typical applications include open areas, building entry/exit points, rooms with high ceilings (>3m <6m), or locations subject to intermittent smoke or vapour.

The module is designed for single applications, and will detect a 25mm cigarette lighter flame at 6 metres within 1 second. When installed a s part of a Cig-Arrête Tobacco Control System, the FUV can be combined with Smoke Detection Slave units (CSA-SGA) to provide complete smoke/flame coverage.

Installation

Connect the detectors as shown in the diagrams below dependant on your particular system. We recommend that you use the factory default sensitivity setting to begin with as this will accommodate the majority of applications.

Design Requirements

If the toilet or restroom cubicles are full height, then 1 detector will be required for each cubicle as shown in the diagram below. For cubicle heights less than this, it is sufficient to install 1 detector over 2 cubicles, since this will provide sufficient coverage for ceiling heights up to 6m high.

In areas that may be subject to misuse or vandalism, it may be prudent to consider installing Anti-Vandal cages (part no CSA-AVC) or perhaps locking the detectors in the base using Anti-Tamper Screwdriver (CSA-ATS)

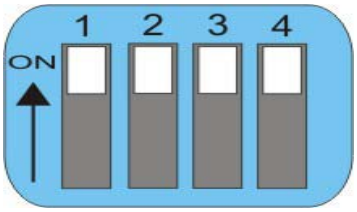

Detector Sensitivity Adjustment

High Sensitivity = SW1 ON + SW2 OFF + SW3 OFF
Normal Sensitivity = SW1 ON + SW2 ON + SW3 OFF
Low Sensitivity = SW1 ON + SW2 ON + SW3 ON

SW4 Used only on CSA-FDV / R model (see separate installation guide)

CONNECTION TO CSA-GDV or CSA-FDV

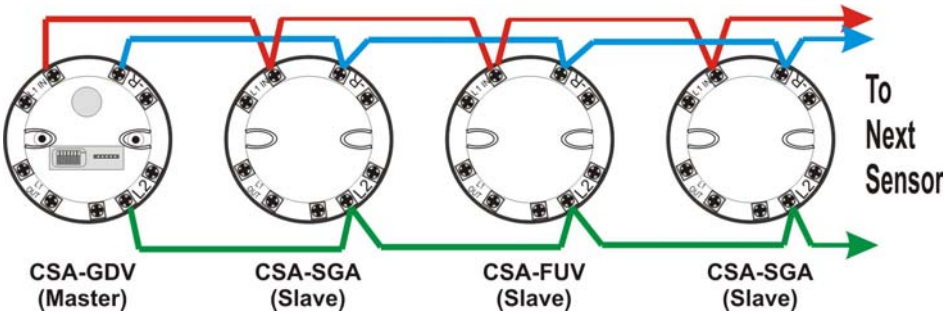

CONNECTION TO CONTROLLER

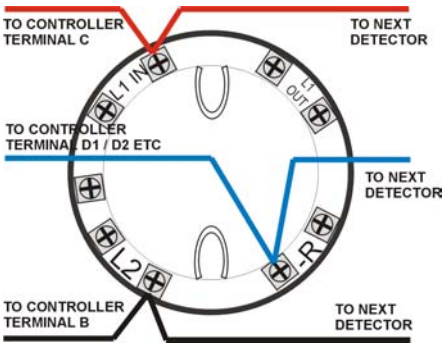

Radal Technology Ltd
Unit 1 Webber Court
Billington Road
Burnley
Lancashire BB11 5UB
England

Web: www.radaltechnology.com

Phone: +44 (0)1282 463 770
Fax: +44 (0)1282 463 771
Email: info@radaltechnology.com

Issue Date: October 2007

Plan For The Ban